CPXC 38-12 HE

Cyclic Lead Carbon battery (1400 cycles)



Dimensions (mm)

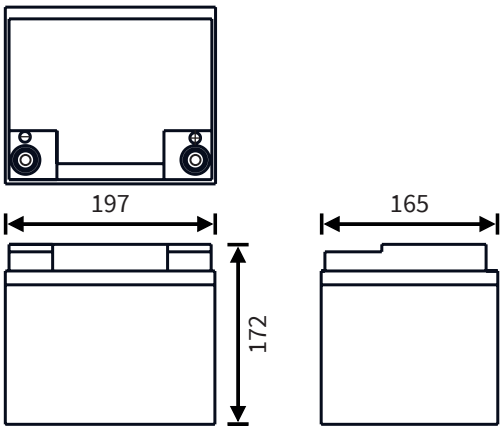

Standard terminal (mm)

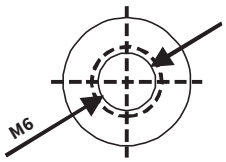

M6 Insert

Typical applications

- Electric vehicles
- Mobility scooters
- Electric wheelchairs
- AGV and warehouse equipment
- Medical equipment
- Solar energy
- Recreational vehicles
- Marine
- Camper and caravan

Features

- Valve Regulated Lead Carbon (Pb-C)
- Maintenance free
- Absorbent Glass Mat Technology (AGM)
- Low self discharge
- Designed for extreme cyclic use
- Can be discharged or stored in any position without leakage
- Battery cannot be charged while upside down
- Produced under ISO 9001 & ISO 14001

Restrictions

This battery is classified as **non spillable** and is therefore **not restricted** for transport under **ADR regulations** (road transport), **IMDG code** (sea transport) and **IATA regulations** (air transport).

Nominal voltage	12 V
Nominal capacity (1.70V/c, 25°C)	20Hr: 41.4 Ah
	10Hr: 39.1 Ah
	5Hr: 35.3 Ah
	1Hr: 25.5 Ah
Internal resistance	≤10.0mΩ (fully charged)
Maximum charge current	9.5 A
Maximum discharge current	456 A (max. 5 sec)
Number of cycles	1400 (50% D.O.D.)
Float use / cyclic use	13.5 - 13.8V / 14.4 - 15.0V
Charge temperature range	-20°C ~ 50°C
Discharge temperature range	-20°C ~ 60°C
Standard terminal	Insert M6 (5 Nm torque)
Housing material	ABS (UL94-HB)
Dimensions Length	197 mm
Dimensions Width	165 mm
Dimensions Height	172 mm
Approximate Weight	12.50 kg
Packing	1 pcs / box

Recommended

Having the right battery is often just the beginning. Optimal use of a battery requires having a good battery charger, so that the user can be sure that their battery is always optimally charged and has maximum lifespan.

Cellpower offers various intelligent battery chargers, as well as battery testers, battery monitors and battery guards. All designed to easily monitor the battery quality and make sure the battery remains in the best condition possible.



Recommended for CPXC 38-12 HE

Charge characteristics

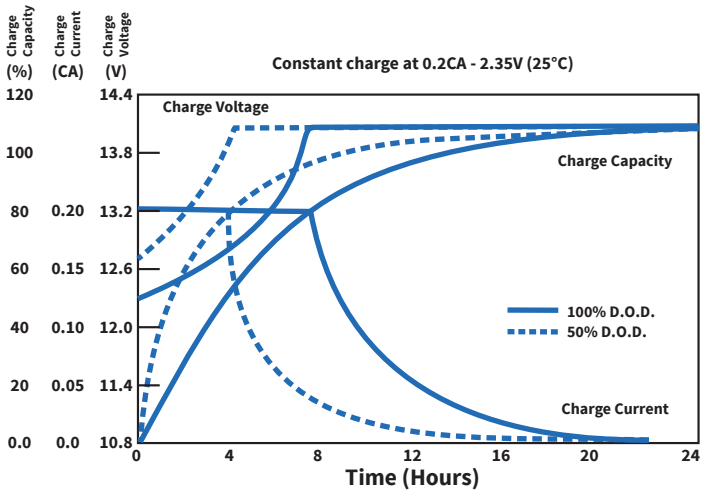

Capacity in relation to temperature

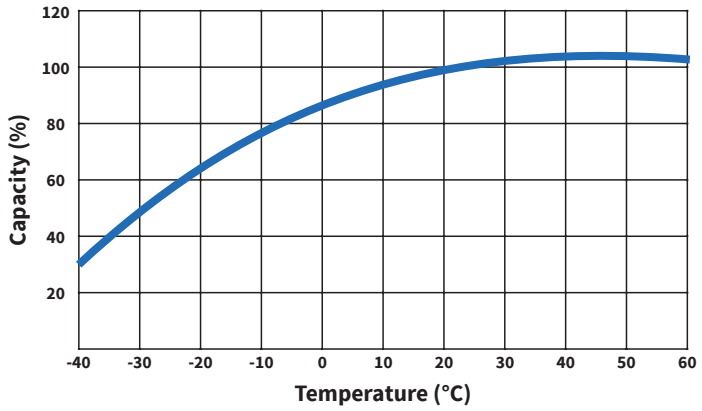

Discharge characteristics

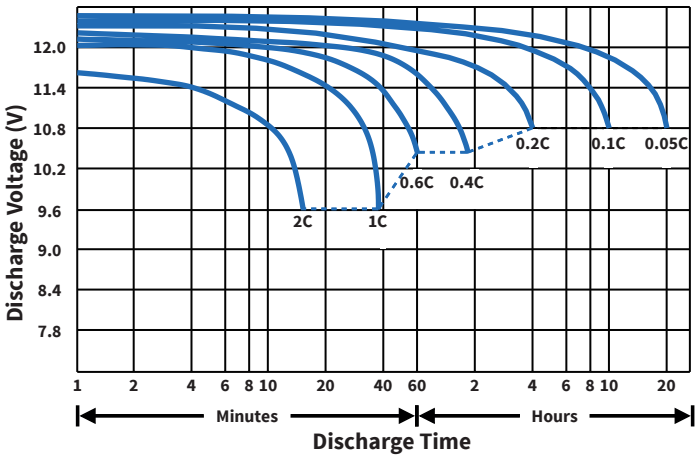

Cycle service life in relation to depth of discharge

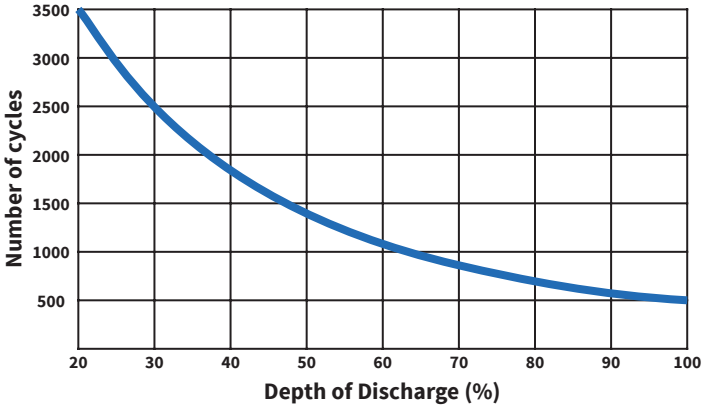

Cellpower family

Cellpower supplies a broad range of reliable AGM, GEL and Lithium batteries. Each product series has its own unique characteristics, so that there is a suitable battery for every application with its associated specific usage profile. Combined with the right Cellpower battery accessories, you are able to assemble a high-quality and reliable battery system.

The sealed, maintenance-free AGM lead battery type has a long operational lifetime. When used correctly, the Absorbent Glass Mat (AGM) technology offers dependable, lasting service. Additionally, AGM batteries exhibit very little self-discharge when compared with other lead-acid batteries. Sealed lead-acid batteries require low maintenance and do not need to be refilled with water or other liquids.

