CPXC 78-12 HE

Cyclic Lead Carbon battery (1400 cycles)



Dimensions (mm)

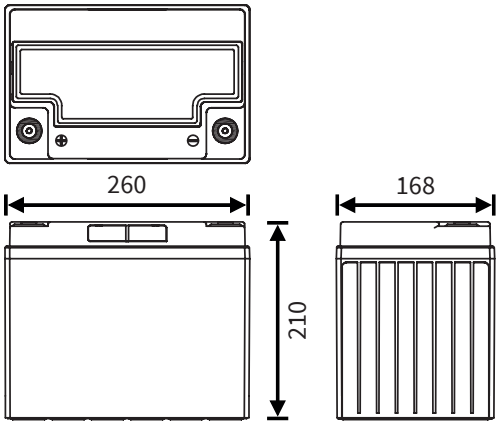

Standard terminal (mm)

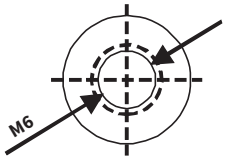

M6 Insert

Typical applications

- Electric vehicles
- Mobility scooters
- Electric wheelchairs
- AGV and warehouse equipment
- Medical equipment
- Solar energy
- Recreational vehicles
- Marine
- Camper and caravan

Features

- Valve Regulated Lead Carbon (Pb-C)
- Maintenance free
- Absorbent Glass Mat Technology (AGM)
- Low self discharge
- Designed for extreme cyclic use
- Can be discharged or stored in any position without leakage
- Battery cannot be charged while upside down
- Produced under ISO 9001 & ISO 14001

Restrictions

This battery is classified as **non spillable** and is therefore **not restricted** for transport under **ADR regulations** (road transport), **IMDG code** (sea transport) and **IATA regulations** (air transport).

Nominal voltage	12 V
Nominal capacity (1.70V/c, 25°C)	20Hr: 87.2 Ah
	10Hr: 82.4 Ah
	5Hr: 74.5 Ah
	1Hr: 53.7 Ah
Internal resistance	≤6.6mΩ (fully charged)
Maximum charge current	20.0 A
Maximum discharge current	960 A (max. 5 sec)
Number of cycles	1400 (50% D.O.D.)
Float use / cyclic use	13.5 - 13.8V / 14.4 - 15.0V
Charge temperature range	-20°C ~ 50°C
Discharge temperature range	-20°C ~ 60°C
Standard terminal	Insert M6 (5 Nm torque)
Housing material	ABS (UL94-HB)
Dimensions Length	260 mm
Dimensions Width	168 mm
Dimensions Height	210 mm
Approximate Weight	26.00 kg
Packing	1 pcs / box

Recommended

Having the right battery is often just the beginning. Optimal use of a battery requires having a good battery charger, so that the user can be sure that their battery is always optimally charged and has maximum lifespan.

Cellpower offers various intelligent battery chargers, as well as battery testers, battery monitors and battery guards. All designed to easily monitor the battery quality and make sure the battery remains in the best condition possible.



Recommended for CPXC 78-12 HE

CELL POWER

Lead Carbon Battery PERFORMANCE DATA

Charge characteristics

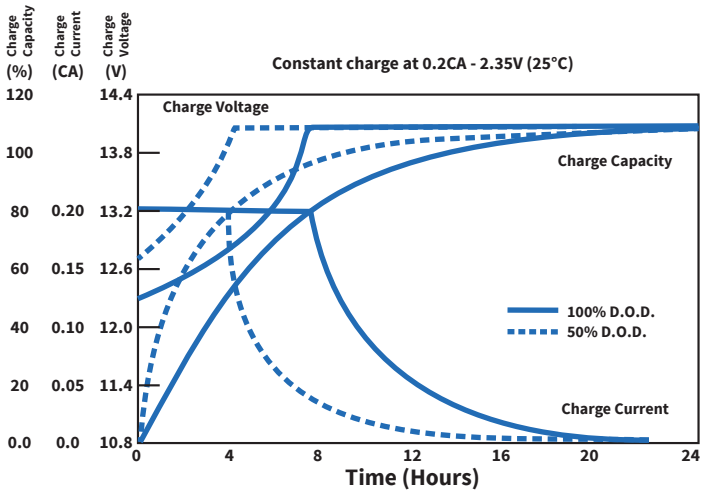

Capacity in relation to temperature

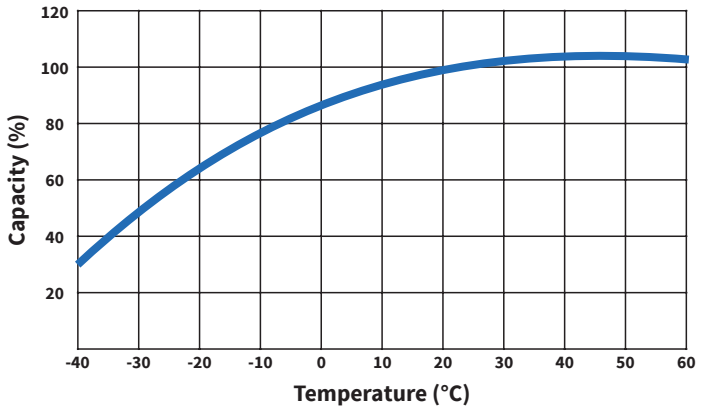

Discharge characteristics

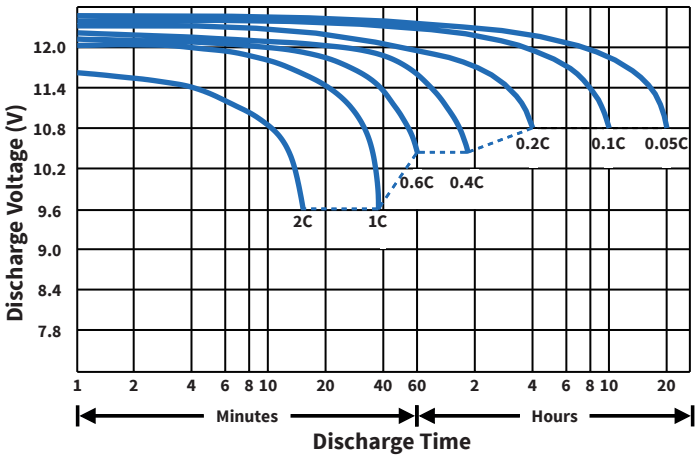

Cycle service life in relation to depth of discharge

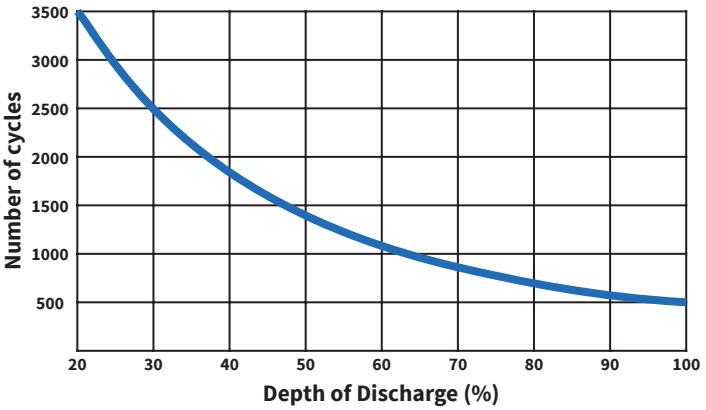

Models available

Model	Voltage	Capacity (Ah)	Dimensions (mm)	Weight (kg)
CPXC 500-2	2	500	170x285x342	35.0
CPXC 1200-2	2	1200	233x210x681	89.0
CPXC 225-6 HE	6	225	243x188x275	31.7
CPXC 250-6 HE	6	250	260x180x273	35.0
CPXC 300-6 HE	6	300	295x178x360	47.0
CPXC 38-12 HE	12	38	197x165x172	12.5
CPXC 45-12 HE	12	45	197x165x172	15.0
CPXC 55-12 HE	12	55	223x136x177	15.0
CPXC 56-12 HE	12	56	230x138x215	17.5
CPXC 68-12 HE	12	68	262x165x169	19.5
CPXC 70-12	12	70	261x167x213	24.5
CPXC 78-12 HE	12	78	260x168x210	26.0
CPXC 80-12	12	80	331x171x221	30.5
CPXC 130-12 HE	12	130	330x172x214	34.5
CPXC 135-12 HE	12	135	336x172x279	45.0
CPXC 150-12	12	150	533x206x219	55.0
CPXC 170-12	12	170	523x238x224	63.0
CPXC 200-12 HE	12	200	522x240x222	61.5
CPXC 250-12 HE	12	250	520x268x223	71.0

Cellpower family

Cellpower supplies a broad range of reliable AGM, GEL and Lithium batteries. Each product series has its own unique characteristics, so that there is a suitable battery for every application with its associated specific usage profile. Combined with the right Cellpower battery accessories, you are able to assemble a high-quality and reliable battery system.

The sealed, maintenance-free AGM lead battery type has a long operational lifetime. When used correctly, the Absorbent Glass Mat (AGM) technology offers dependable, lasting service. Additionally, AGM batteries exhibit very little self-discharge when compared with other lead-acid batteries. Sealed lead-acid batteries require low maintenance and do not need to be refilled with water or other liquids.

